1. General Description

A: COMPONENT

1. DOOR LOCK ASSEMBLY

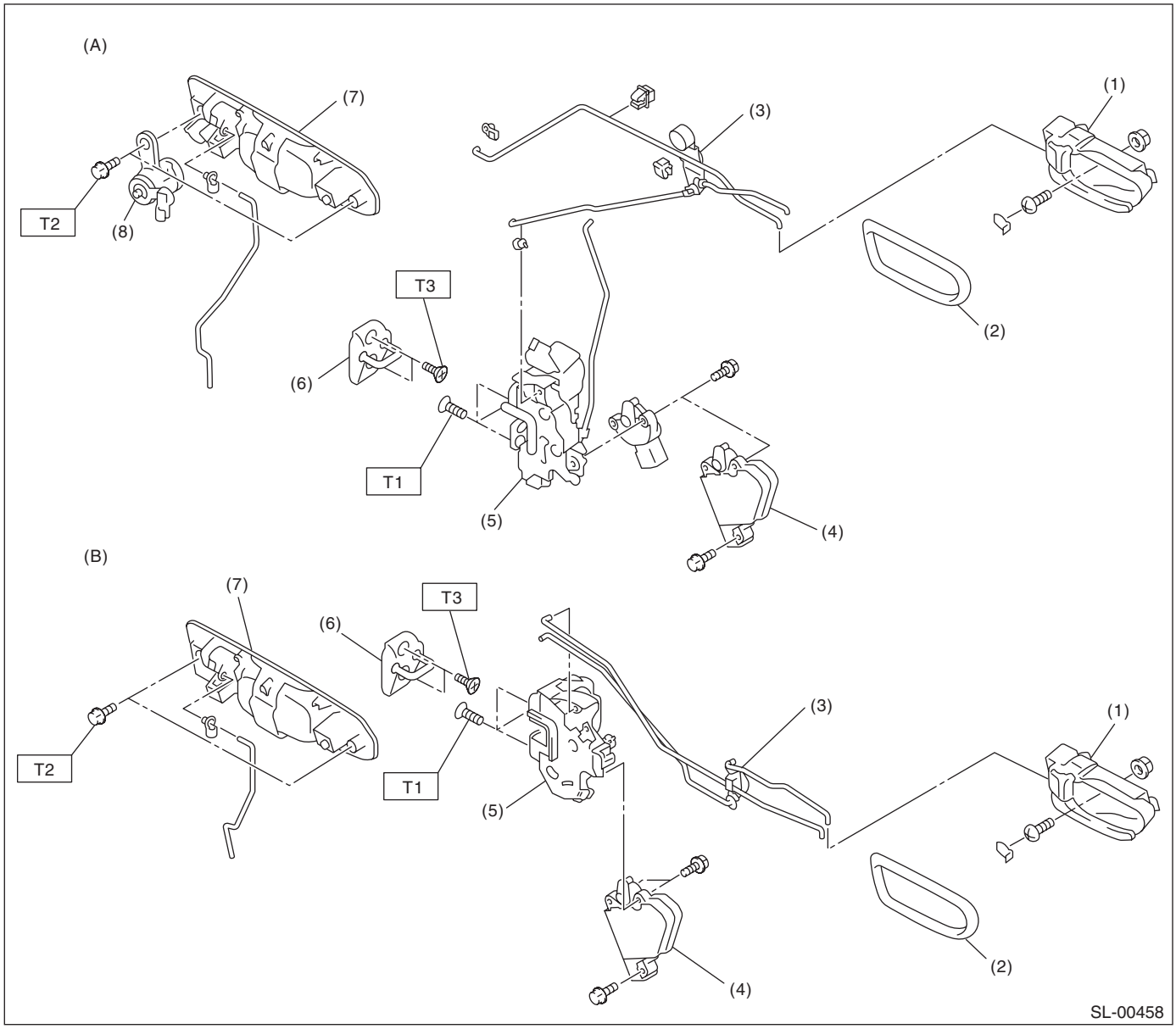

(A)	Front	(B)	Rear

(1)	Inner remote ASSY	(5)	Door latch
(2)	Inner remote cover	(6)	Striker
(3)	Bell crank	(7)	Outer handle
(4)	Door lock actuator	(8)	Key cylinder

Tightening torque:N·m (kgf-m, ft-lb)

T1: 6.4 (0.65, 4.7)
T2: 7.4 (0.75, 5.5)
T3: 17.6 (1.8, 13.0)

2. TRUNK LID AND REAR GATE LOCK

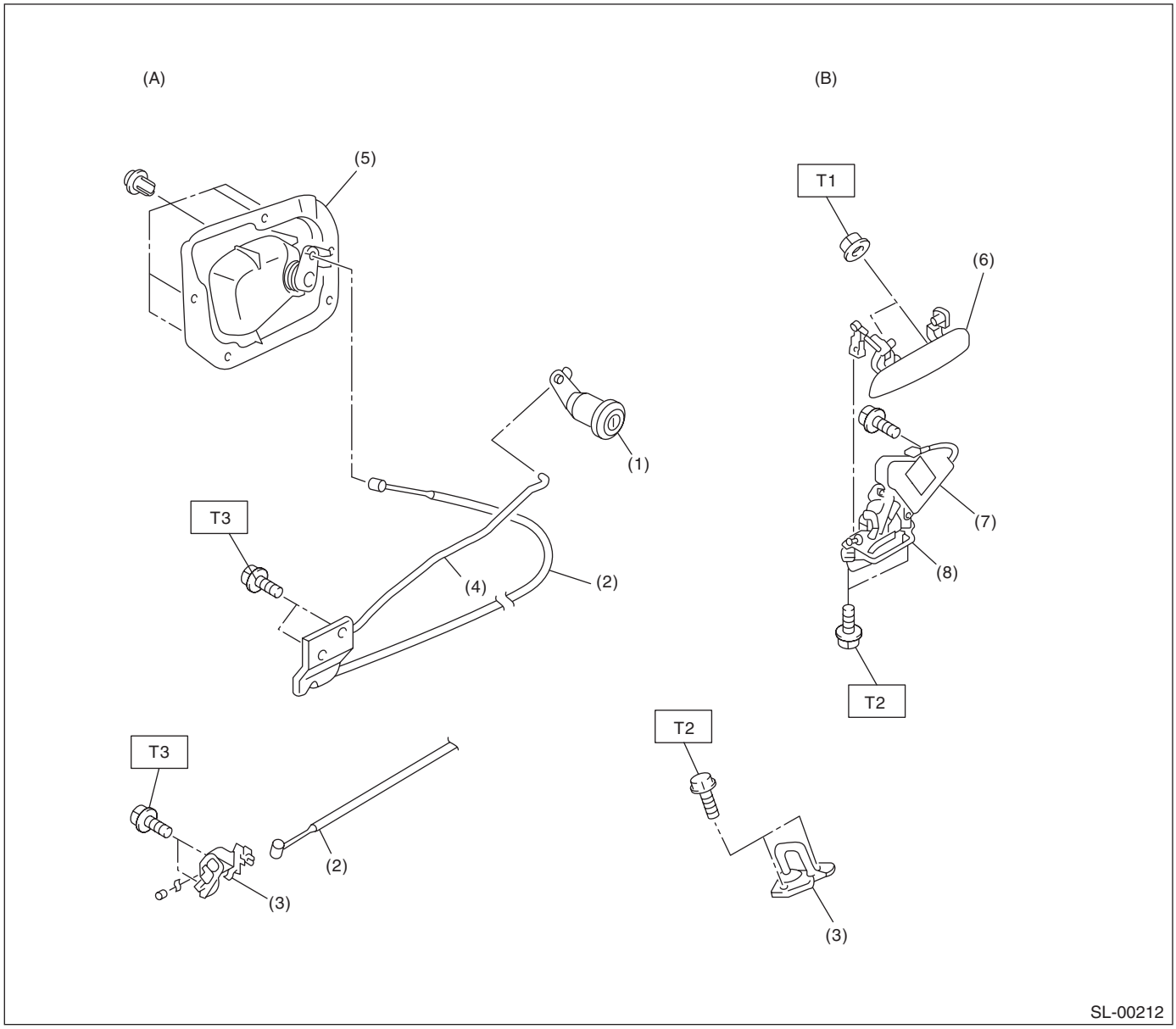

(A)	Trunk	(B)	Rear gate
(1)	Key cylinder	(5)	Trunk lid release handle
(2)	Cable	(6)	Rear gate outer handle
(3)	Striker	(7)	Rear gate actuator
(4)	Trunk lid lock ASSY	(8)	Rear gate latch

Tightening torque:N·m (kgf-m, ft-lb)

T1: 4.5 (0.45, 3.3)

T2: 25 (2.5, 18.4)

T3: 18 (1.84, 13.3)

3. FRONT HOOD LOCK AND REMOTE OPENERS

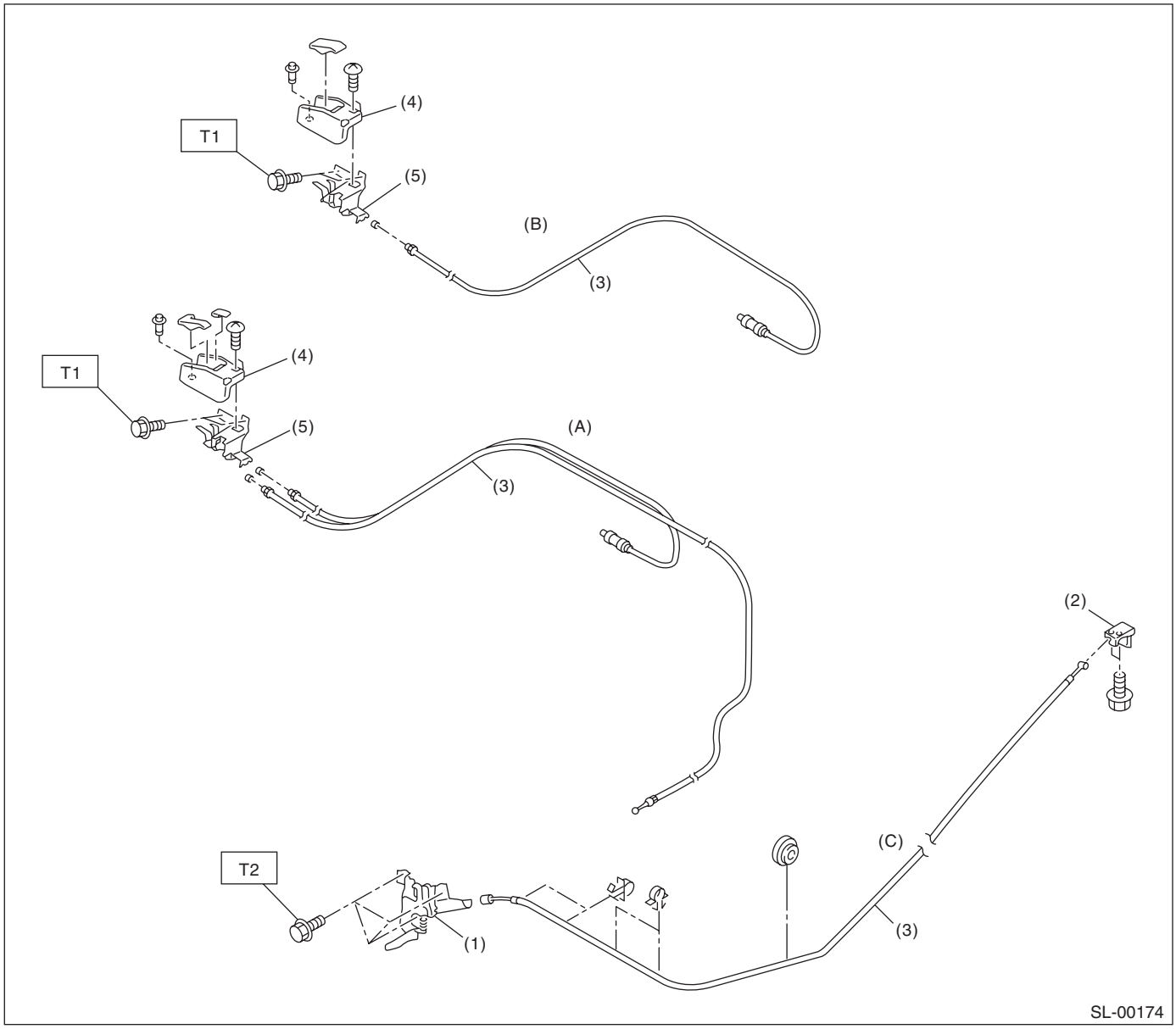

(A)	Sedan	(B)	Wagon	(C)	Hood
(1)	Front hood lock ASSY	(4)	Cover		
(2)	Lever ASSY	(5)	Pull handle ASSY		
(3)	Cable				

Tightening torque:N·m (kgf-m, ft-lb)
T1: 6.5 (0.66, 4.7)
T2: 32 (3.3, 23.9)

4. KEYLESS ENTRY SYSTEM

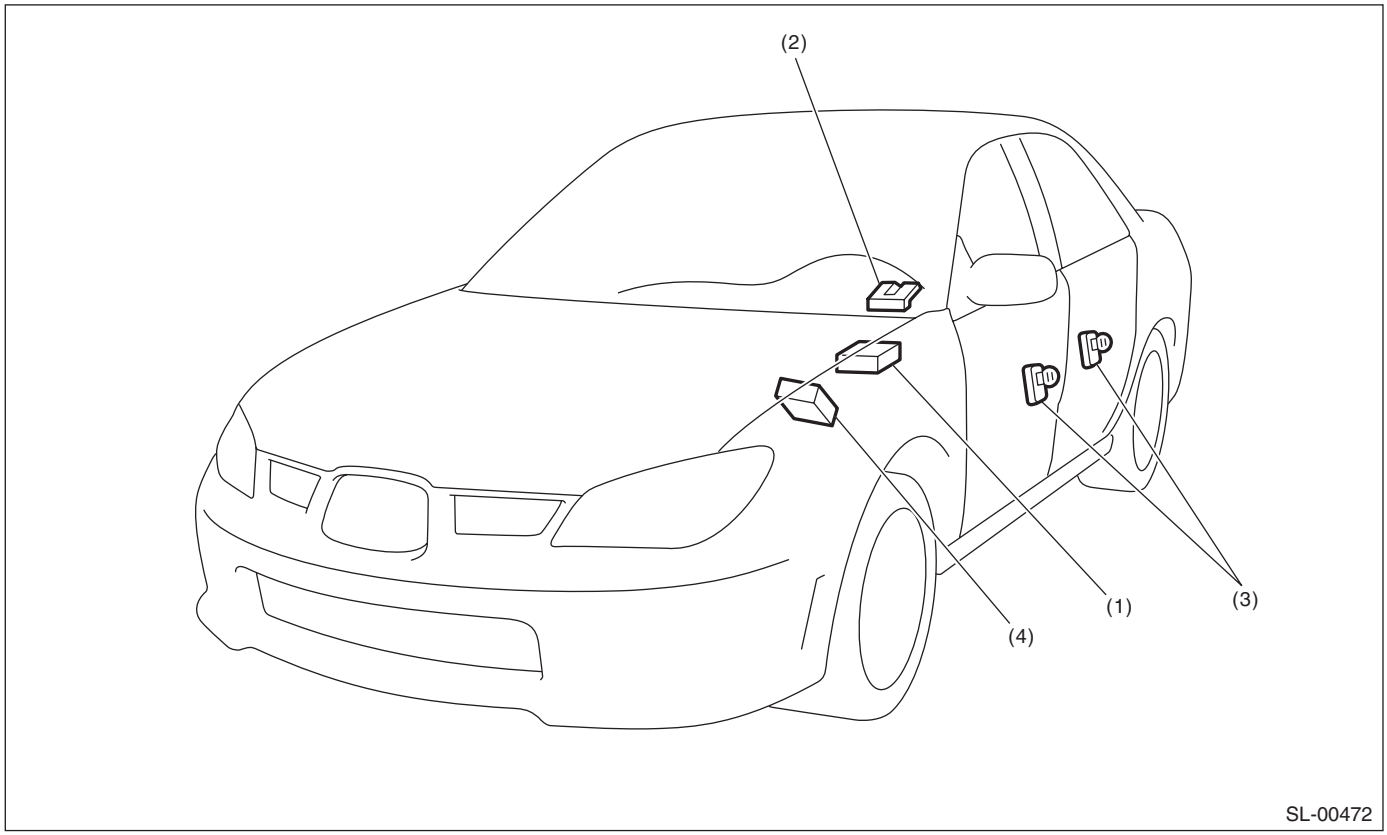

(1) Keyless entry control module
(2) Rear gate latch switch (wagon model)
(3) Door switch
(4) Body integrated unit

5. IMMOBILIZER SYSTEM

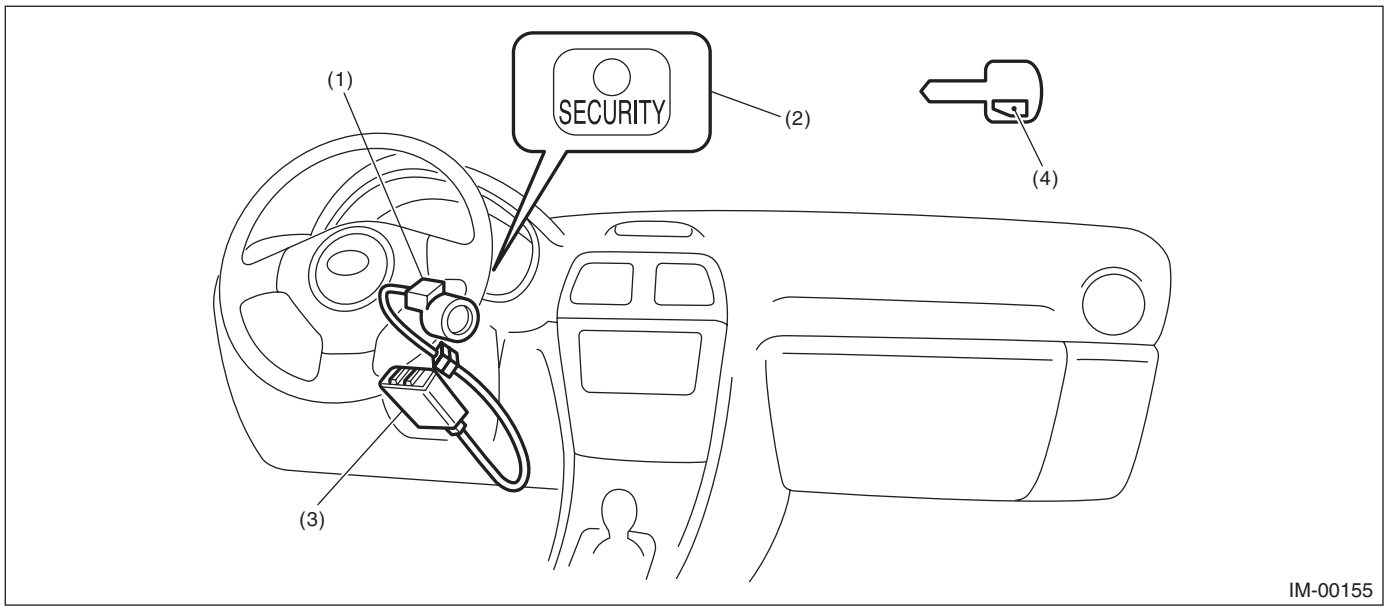

(1) Antenna
(2) Security indicator light (LED bulb)
(3) Immobilizer control module (IMMCM)
(4) Transponder

6. SECURITY SYSTEM

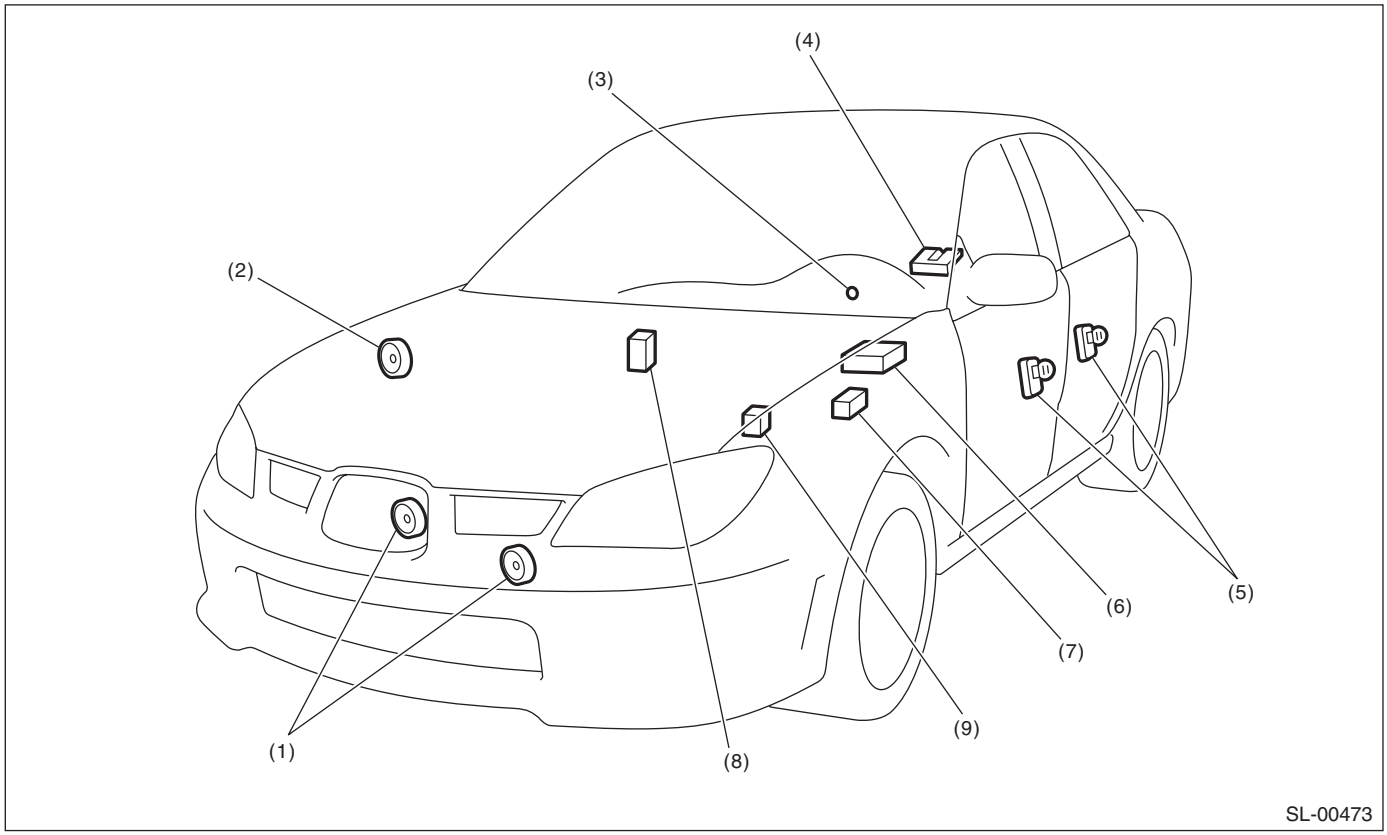

(1) Horn
(2) Security horn
(3) Security indicator light (in combination meter)
(4) Trunk room light switch (sedan), rear gate latch switch (wagon)
(5) Door switch
(6) Keyless entry control module
(7) Security horn relay
(8) Interrupt relay
(9) Horn relay (in main fuse box)

B: CAUTION

- Before disassembling or reassembling parts, always disconnect the battery ground cable from battery. When repairing the audio, control module, etc. which are provided with memory functions, record the memory contents before disconnecting the ground cable from battery. Otherwise, these contents are erased upon disconnection.
- Reassemble the parts in the reverse order of disassembly unless otherwise indicated.
- Adjust the parts to the specifications described in this manual if so designated.
- Connect the connectors securely during reassembly.
- After reassembly, make sure all the functional parts operate smoothly.
- The airbag system wiring harness is routed near electrical parts and switches.
- Do not use electrical test equipment on any airbag system wiring harnesses or connector circuits.
- Be careful not to damage the airbag system wiring harness when servicing the ignition key cylinder.

C: PREPARATION TOOL

1. SPECIAL TOOL

ILLUSTRATION	TOOL NUMBER	DESCRIPTION	REMARKS
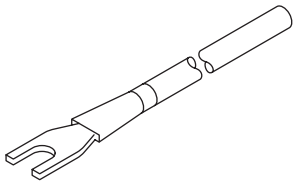 ST-925580000	925580000	PULLER	Used for removing trim clip

2. GENERAL TOOL

TOOL NAME	REMARKS
Circuit tester	Used for measuring resistance and voltage.
Drill	Used for replacing ignition key lock.